High Voltage
Power Capacitors & Capacitor Banks

Answers for energy.

SIEMENS

The market for High Voltage Power Capacitors is continually growing due to new investments in power grids driven by the increasing world power demand.

High Voltage Power Capacitors play a key role in the transmission of electrical energy and are present in High Voltage Direct Current (HVDC) systems as well as Flexible Alternating Current Transmission Systems (FACTS).

High Voltage Power Capacitors improve the performance, quality and efficiency of electrical systems, minimizing the power losses, thus reducing the environmental load and making them more cost effective.

Siemens, a worldwide key player in the energy sector, extends now its product portfolio and introduces High Voltage Power Capacitors, designed to fulfill the highest electrical and mechanical requirements.

Siemens enters the market of power capacitors with a product fit for the most diversified applications, compliant with the most stringent technical and environmental requirements.

Customers profit not only from Siemens' more than three decades of experience in specifying capacitors and capacitor banks for FACTS and HVDC systems but also from a brand new state-of-the-art capacitor plant in Jundiaí, Brazil, with experts selected amongst the most renowned professionals in the market.

The technology acquired by Siemens from an experienced Brazilian manufacturer is present in the Capacitor Banks of the Itaipú HVDC system, which has been in operation for more than 27 years, demonstrating robustness and reliability.

Fields of Application		
Reactive Power Compensation – Flexible AC Transmission Systems	Parallel Compensation	Static Var Compensator (SVC)
		STATCOM
		Mechanically Switched Capacitors (MSC)
	Series Compensation	Thyristor Controlled Series Compensation (TCSC)
		Thyristor Protected Series Compensation (TPSC)
		Fixed Series Compensation (FSC)
Harmonic Filter		
Long Distance HVDC and Back-to-Back Stations		

Siemens Power Capacitors Key Features

- Reliable and robust technology;
- Fulfill the highest electrical and mechanical requirements;
- Flexibility to fit customers needs;
- State-of-the-art manufacturing process;
- Internationally renowned, high quality raw material suppliers;
- Highly qualified and internationally recognized experts.

Capacitor Types
Internally fused, externally fused and fuseless design; single or double bushing

Standards	
NBR 5282/IEC 60871	Shunt capacitors for AC power systems having a rated voltage above 1000 V
IEC 60143	Series capacitors for power systems

or other standards on request

Integrated management systems	
ISO 9001:2008	Quality management systems
ISO 14001:2004	Environmental management systems
OHSAS 18001:2007	Occupational health and safety management systems

Technical data	
Power	Max. 1000/1200 kvar (50/60 Hz)
Voltage	Internally fused: up to 14 kV
	Externally fused/fuseless: up to 23 kV
Current	Max. 180 A
Dielectric	Polypropylene film
Impregnant	Biodegradable oil (non-PCB)
Discharge resistor	Built-in (75 V/10 min or 50 V/5 min or as required)
Losses	Internally fused: ≤ 0.20 W/kvar
	Externally fused/fuseless: ≤ 0.1 W/kvar

Operating conditions	
Temp. range	– 50 / + 55 °C
Location	Indoor or outdoor

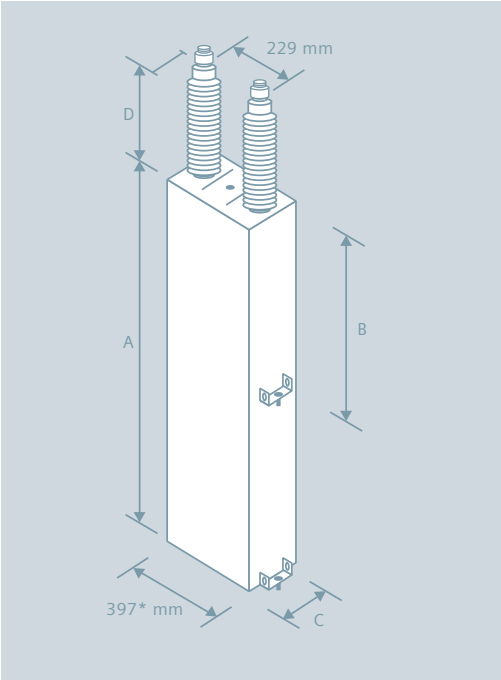

*Distance between holding brackets.

Power [kvar]		A [mm]	B [mm]	C [mm]
50 Hz	60 Hz			
167	200	580	350	150
333	400	780	350	150
500	600	900	370	180
667	800	1020	430	200
833	1000	1280	535	200
1000	1200	1500	600	200

Note: Dimensions can be subject to change and should be confirmed before ordering

D = 220 or 360 mm (depending on bushing type BIL 125 kV or 150 kV)

Capacitor Container	
Material	Ferritic Stainless Steel AISI 409
Surface treatment	Two layers of two-component paint
Color	Grey, Munsell N6.5*)
Fixing brackets	One or two per side

*) Different colors available on request

Terminations	
Bushing	Porcelain. Standard grey color
BIL	125 kV, 150 kV
Terminals/Term. type	M16 x 2.0/parallel groove clamp
Clamps	Tinned bronze max 2 x 50 mm^2

Published by and copyright © 2009:
Siemens AG
Energy Sector
Freyeslebenstrasse 1
91058 Erlangen, Germany

For more information, please contact
Siemens Ltda., E T PS
Av. Eng. João F.G. Molina, 1745
13213-080 Jundiaí – SP – Brazil
Tel: +55 11 4585-5914/2273
Fax: +55 11 4585-2338

Power Transmission Division
Order No. E50001-G610-A111-X-4A00
Printed in Germany
Dispo 30000
TH 150-091004 470732 PA 09091.0

Printed on elementary chlorine-free bleached paper.

All rights reserved.
Trademarks mentioned in this document
are the property of Siemens AG, its affiliates,
or their respective owners.

Subject to change without prior notice.
The information in this document contains general
descriptions of the technical options available, which
may not apply in all cases. The required technical
options should therefore be specified in the contract.

www.siemens.com/energy